©2018 Lennox Industries Inc.
Dallas, Texas, USA

V8MSBB04 Shown

THIS MANUAL MUST BE LEFT WITH THE OWNER FOR FUTURE REFERENCE

These instructions are intended as a general guide and do not supersede local codes in any way. Consult authorities having jurisdiction before installation.

⚠ WARNING

Improper installation, adjustment, alteration, service or maintenance can cause property damage, personal injury or loss of life.

Installation and service must be performed by a licensed professional HVAC installer, service agency or the gas supplier.

Failure to follow safety warnings and these instructions exactly could result in property damage, dangerous operation, serious injury, or death.

Any additions, changes, or conversions required in order for the appliance to satisfactorily meet the application needs must be made by a licensed professional HVAC installer (or equivalent) using factory-specified parts.

Do not use this system if any part has been under water. A flood-damaged appliance is extremely dangerous. Immediately call a licensed professional HVAC service technician (or equivalent) to inspect the system and to replace all controls and electrical parts that have been wet, or to replace the system, if deemed necessary.

⚠ WARNING

The Mode Selection Box is factory fitted with Black plastic caps over the flare connection points. These must be replaced with the supplied brass flare nuts. Under no circumstances can the plastic caps be used as a permanent seal even when not all ports are used. A suitable blanking device must be fitted on all unused ports.

INSTALLATION INSTRUCTIONS

Mode Selection Box

VRF SYSTEMS
507453-05
05/2018

Shipping and Packing List

Check the components for shipping damage. If you find any damage, immediately contact the last carrier.

Package 1 of 1 contains the following:

1 - Assembled mode selection box
3 - Insulation sleeves for piping from outdoor unit
1 - 1” X ¾” condensate drain adaptor
1 to 6* - ⅜” to ¼” adaptors
1 to 6* - ⅝” to ½” adaptors
1 to 6* - ¼” brass flare nuts
1 to 6* - ½” brass flare nuts
1 to 6* - Gas pipe insulation sleeve(s)
1 to 6* - Liquid pipe insulation sleeves

*Quantity of these items depends on number of refrigerant piping connection pairs.

Installation

Mode selection boxes V8MSBB01, V8MSBB02, V8MSBB03 and V8MSBB04 are used with VRA heat recovery outdoor units to allow simultaneous heating and cooling in multiple zones. Mode selection boxes are designed for indoor installation only.

Mode selection boxes include solenoid valves which control refrigerant flow through the individual indoor units so that unit operation (heating or cooling) matches the comfort requirements being sent by the occupant.

Mode selection boxes are sized to accommodate up to 24 indoor units. See Table 1.

Mode selection boxes are equipped with flared fittings for indoor unit refrigerant piping connections and braze fittings for outdoor unit connections.

Refer to the Product Specification bulletin (EHB) for the proper use of mode selection boxes with matching VRA heat recovery units, indoor units, branch pipes, line sets and controls.

⚠ CAUTION

As with any mechanical equipment, contact with sharp sheet metal edges can result in personal injury. Take care while handling this equipment and wear gloves and protective clothing.

⚠ CAUTION

To ensure proper system performance and reliability, Lennox does not recommend operation of VRF systems during any phase of construction. Construction debris, low temperatures, harmful vapors, and operation of the unit with misplaced filters can damage the units. Failure to follow these guidelines will result in the warranty being voided.

⚠ IMPORTANT

The Clean Air Act of 1990 bans the intentional venting of refrigerant (CFC's and HCFC's) as of July 1, 1992. Approved methods of recovery, recycling or reclaiming must be followed. Fines and/or incarceration may be levied for non-compliance.

System Piping

⚠ CAUTION

VRF system piping is customized for each installation. The LVSS (Lennox VRF Selection Software) piping report is an engineered design that must be followed. The piping diagram or diagrams included within the LVSS report have been prepared based on the information provided to the Lennox VRF applications department.

When the indicated lengths change from the figures stated within the report, it is imperative that prior to the commencement of the refrigerant pipe work installation, Lennox VRF applications department are informed of these proposed changes.

Upon receipt of this new information the Lennox VRF applications department will confirm any changes that may be applicable to this installation. If changes are required, a new piping diagram will be produced and will supersede all other previously provided documents.

Failure to provide this information regarding changes to the original design may lead to insufficient capacity, equipment failure, warranty being made void and the refusal to commission the system.

Unit Dimensions - inches (mm)

V8MSBB01, V8MSBB02, V8MSBB03, V8MSBB04

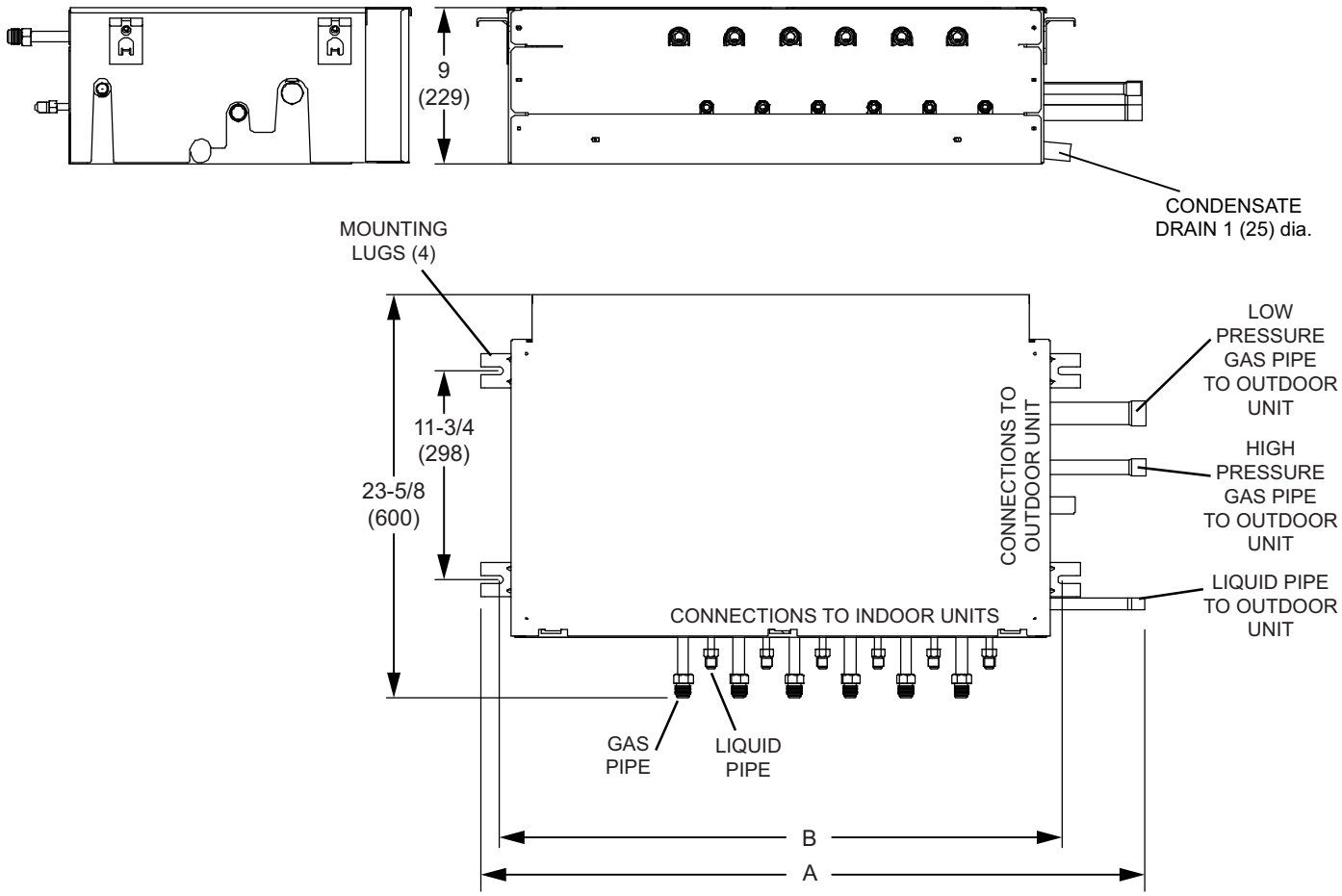

Model No.	A		B	
	in.	mm	in.	mm
V8MSBB01	24-3/4	629	19-1/4	489
V8MSBB02	24-3/4	629	19-1/4	489
V8MSBB03	37-3/4	959	32-1/4	819
V8MSBB04	37-3/4	959	32-1/4	819

Model No.	Pipe Diameter - in.				
	Connections to Outdoor Unit			Connections to Indoor Unit	
	Low Pressure Gas Pipe	High Pressure Gas Pipe	Liquid Pipe	[1] Liquid Pipe	[2] Gas Pipe
V8MSBB01	7/8	3/4	1/2	3/8	5/8
V8MSBB02	7/8	3/4	1/2	3/8	5/8
V8MSBB03	1-1/8	7/8	5/8	3/8	5/8
V8MSBB04	1-1/8	7/8	5/8	3/8	5/8

[1] 3/8 x 1/4 in. adaptor furnished for liquid pipe connection to outdoor unit (if required).

[2] 5/8 x 1/2 in. adaptor furnished for gas pipe connection to outdoor unit (if required).

Installation Clearances - inches (mm)

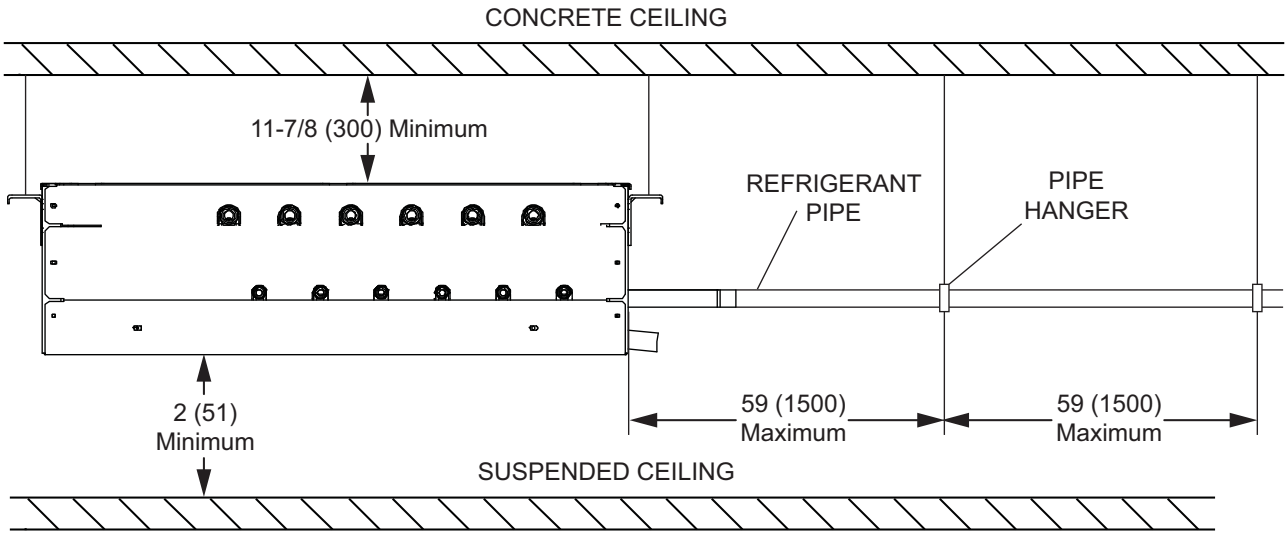

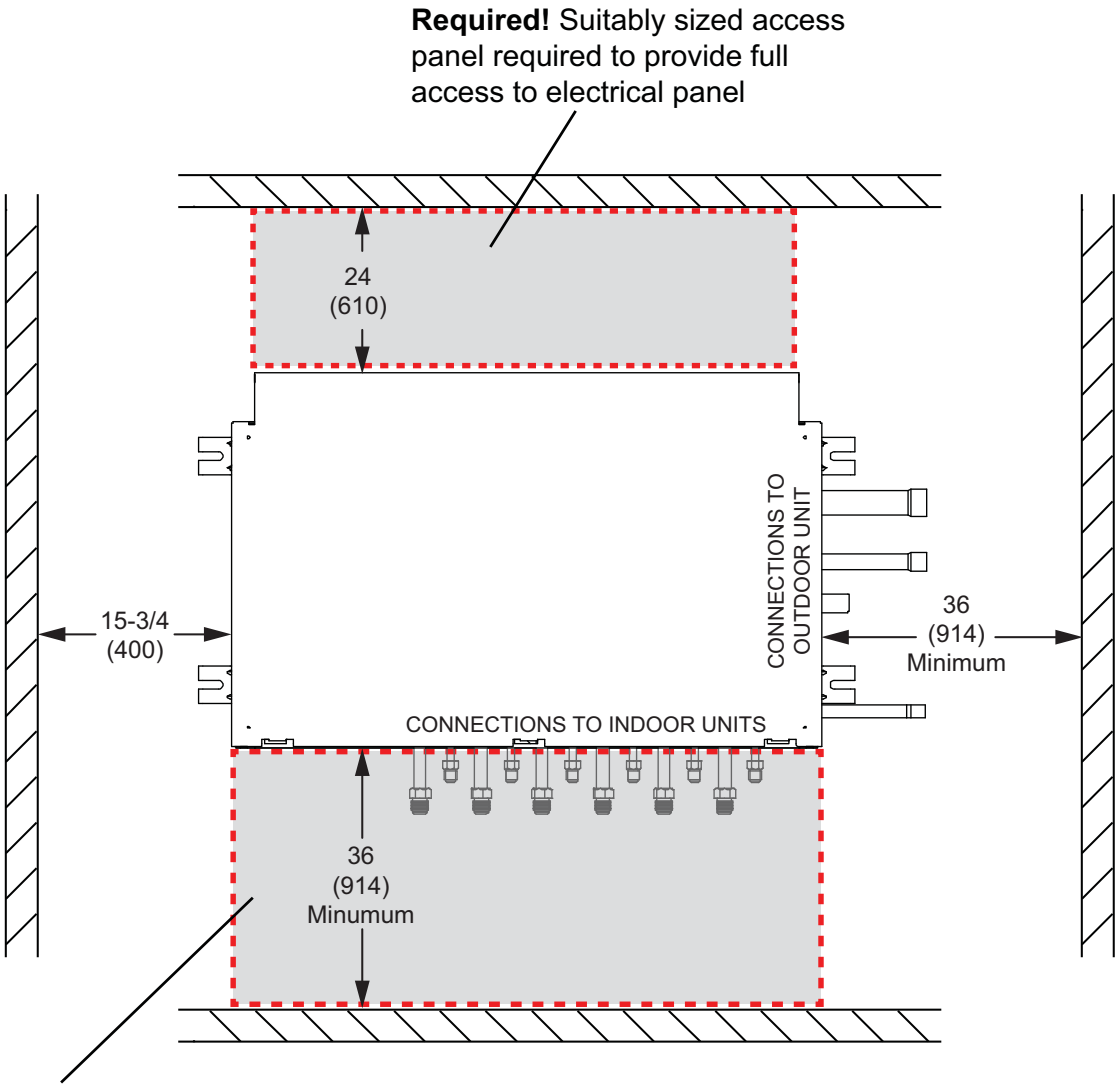

Access panels are a requirement for system commissioning and future preventative maintenance.

Table 1. Mode Selection Boxes

Model No.	Application
V8MSBB01*	1 group, 1 indoor unit maximum
V8MSBB02	2 groups, 4 indoor units maximum per group, 8 indoor units maximum
V8MSBB03	4 groups, 4 indoor units maximum per group, 16 indoor units maximum
V8MSBB04	6 groups, 4 indoor units maximum per group 24 indoor units maximum

*Use with VHIA072 and VHIA096 only.

Mode Selection Box Location

Consider the following items when positioning the mode selection box for installation:

- Sounds are made by refrigerant as solenoid valves open and close inside the mode selection box. Do not install the mode selection box where these sounds may disturb building occupants.
- The mode selection box must be sloped 1/8” toward condensate drain outlet.
- Provide sufficient clearance around mode selection box to allow 3 feet of straight pipe before the first elbow or branch pipe is installed. See Figure 3.
- If the unit is being installed in an application that includes a sheet rock (plasterboard) ceiling, it is required that an access panel be installed in a suitable location. This will also allow access for future maintenance (requirement of Lennox warranty program).
  Access is required during the commissioning process to check the internal components, solenoid valves and associated flare nuts (See page 3), and to check the local disconnect.

Mode Selection Box Installation

⚠ IMPORTANT

The Clean Air Act of 1990 bans the intentional venting of refrigerant (CFC’s and HCFC’s) as of July 1, 1992. Approved methods of recovery, recycling or reclaiming must be followed. Fines and/or incarceration may be levied for non-compliance.

Use the provided suspension brackets to suspend the mode selection box(es) between the outdoor and indoor units. The mode selection box location must be able to accommodate the size of the box, as well as the required 3 feet of straight pipe length between the box and the first elbow or branch pipe. Refer to the dimension drawing on Page 3 and Figure 3.

1. Make sure that the structural ceiling is able to support the weight of the mode selection box(es). It may be necessary to add extra support. If the structural ceiling is constructed of concrete, install anchors to accept four ⅜ inch threaded rods to suspend the mode selection box. If the structural ceiling includes wooden joists, use angle iron or a Unistrut channel fixed securely in place to accept the ⅜ inch threaded rods. See Figure 1.

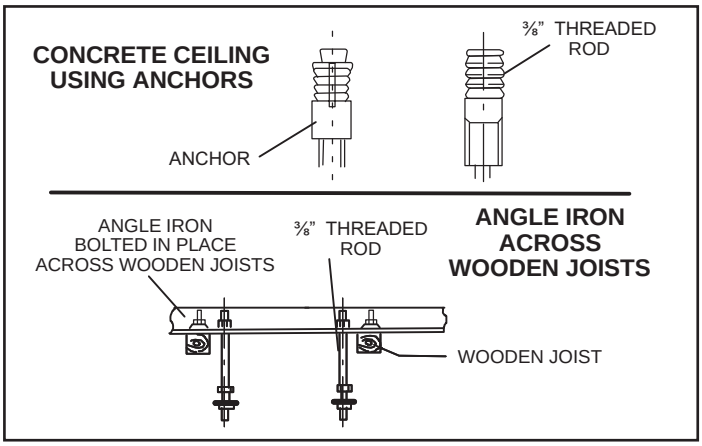

Figure 1. Suspending Methods

NOTE - *Threaded rod (requirement of Lennox warranty program) is the ONLY acceptable method of suspending the unit; do not use chains or straps.*

2. Slide one nut and one washer onto each threaded rod. Use electrical tape to keep the washer from failing off. Position the nuts slightly above the final resting place of the four suspension brackets.

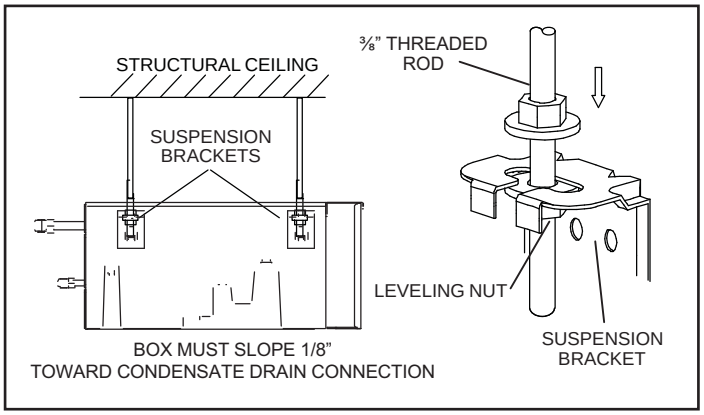

Figure 2. Suspension Hardware

3. Raise the mode selection box and insert the threaded rods into the suspension brackets. Slide a washer and then a nut onto each rod below each suspension bracket. Use the leveling nut (beneath suspension bracket) to adjust the mode selection box. Remove the electrical tape holding the upper washers and nuts in place and tighten each of the four nuts above the brackets down onto the brackets. The mode selection box must be sloped 1/8” toward condensate drain outlet.
4. Continue with refrigerant piping connections.

Refrigerant Piping Connections

⚠ WARNING

Refrigerant leaks are unlikely; however, if a refrigerant leak occurs, open a door or windows to dilute the refrigerant in the room. Turn off the unit and all other appliances that may cause a spark. Call a licensed professional HVAC technician (or equivalent) to repair the leak.

Use only R410A refrigerant to charge this system. Use of other refrigerant or gas will damage the equipment.

Do not allow air or other contaminants to enter system during installation of refrigerant piping. Contaminants will result in lower system capacity and abnormally high operating pressures and may result in system failure or explosion.

Insulate all refrigerant piping.

Refrigerant pipes may be very hot during unit operation. Do not allow contact between wiring and bare copper pipes.

After refrigerant piping connections have been completed, check the system for leaks per commissioning instructions.

⚠ WARNING

The Mode Selection Box is factory fitted with Black plastic caps over the flare connection points. These must be replaced with the supplied brass flare nuts. Under no circumstances can the plastic caps be used as a permanent seal even when not all ports are used. A suitable blanking device must be fitted on all unused ports.

⚠ IMPORTANT

Do not remove seals from refrigerant piping stubs until connections are being made. This will prevent dust or water from getting into the refrigerant piping before it is connected.

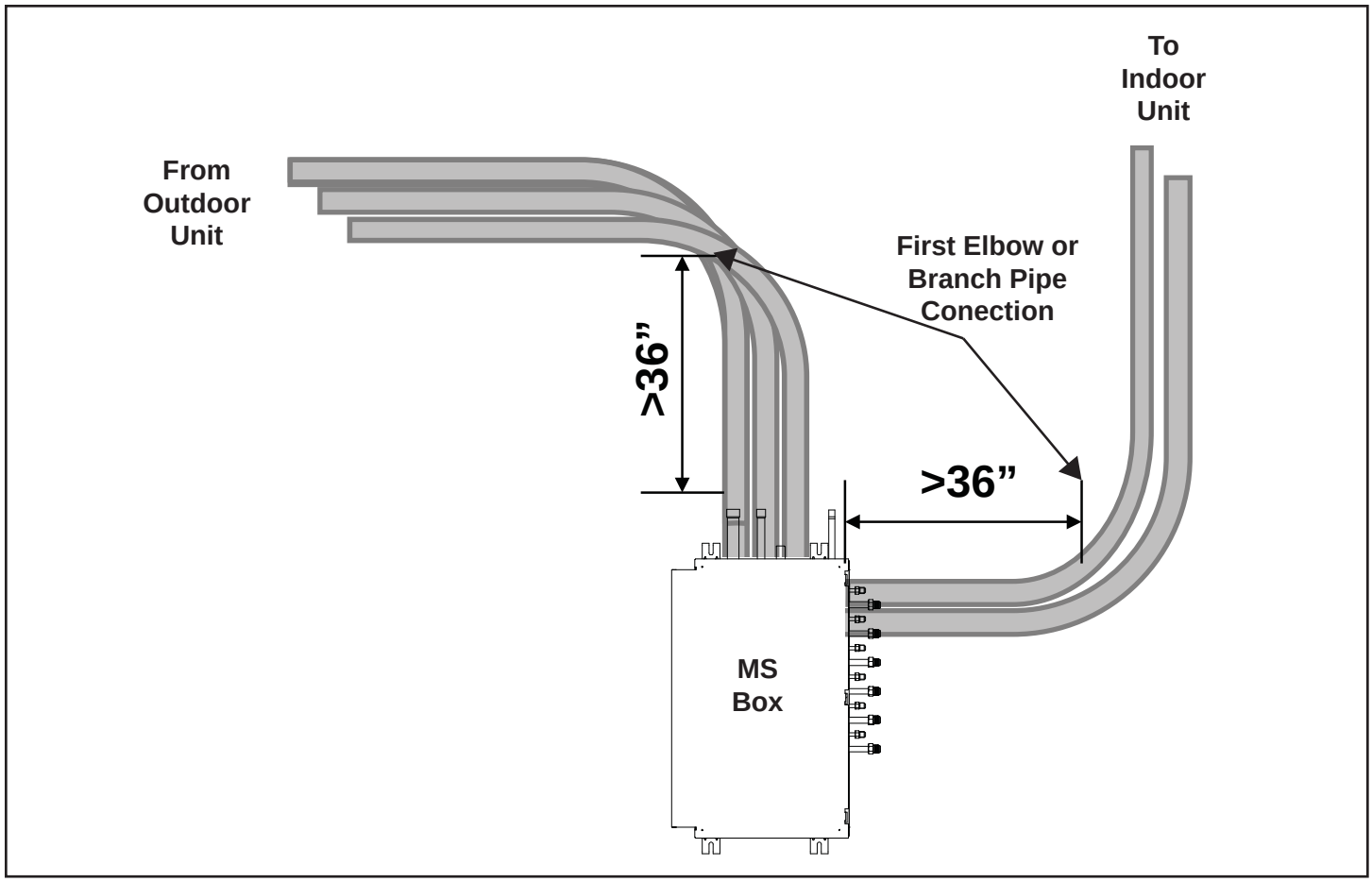

Figure 3. Mode Selection Box Piping

- Refrigerant piping connections from outdoor unit(s) are made with field-brazed connections. Field piping connections for the outdoor unit gas pipes and liquid pipe are provided on the right side of the mode selection box.
- The four available mode selection boxes can accommodate varying numbers of indoor units. See Table 1 and Figure 4.
  Outgoing gas and liquid connections for the indoor units are on the front of the box. Connections to the indoor units are made using the provided brass flare nuts. Adaptors are provided with the mode selection box to accommodate the use of different pipe sizes. Refer to the LVSS (Lennox VRF Selection Software) piping report for pipe sizes.
- Refer to the VRA heat recovery unit installation instructions and product specifications (EHB) bulletin for more detailed information on refrigerant piping connections.
- Field refrigerant piping for the VRA heat recovery units includes a variety of branch pipe kits, mode selection boxes and field-provided piping.
  Outdoor unit branch pipe kits are used to join multiple outdoor units to reach the required system capacity. Mode selection box branch pipe kits are available to evenly split system capacity among the varying numbers of mode selection boxes.
  Indoor unit branch pipe kits split the system capacity among up to four indoor units per connection from each mode selection box. See mode selection box branch pipe kits in Figure 8 and a typical VRA system piping schematic in Figure 9.
- Allow a minimum of 3 feet between the mode selection box and the first elbow or branch pipe in refrigerant piping. See Figure 3.
- After refrigerant piping has been installed and checked for leaks, apply the provided insulation sleeves over all connections.

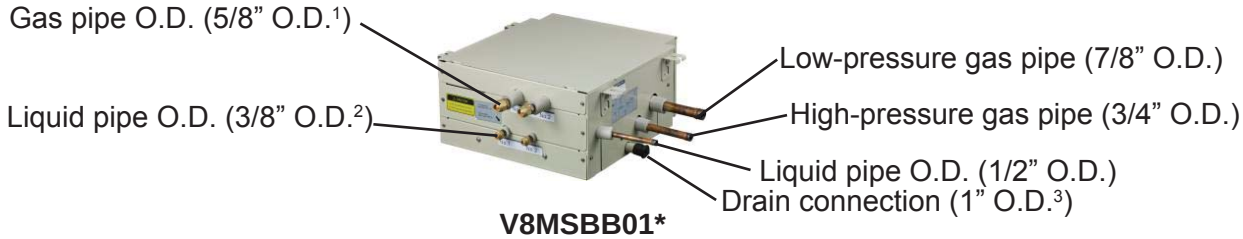

V8MSBB01*
V8MSBB02

* Use with VHIA072 and 096 only. Connective branch pipe kit included with indoor unit.

V8MSBB03

V8MSBB04

[1] 3/8 x 1/4 in. adaptor furnished for liquid pipe connection to indoor unit (if required).

[2] 5/8 x 1/2 in. adaptor furnished for gas pipe connection to indoor unit (if required).

[3] 1 inch x 3/4 in. condensate drain adaptor furnished for field installation (if required).

Figure 4. Mode Selection Box Piping Connection Details

All lines must be individually insulated.

1. The seal on the mode selection box refrigerant piping connections should remain in place until the last possible moment. This will prevent dust or water from getting into the refrigerant piping before it is connected.
2. Remove the black plastic caps from the mode selection box connections and discard.
3. Slide the flare nuts onto the ends of the field-provided refrigerant piping **before** using a suitable flaring tool to flare the end of the copper pipe.
4. Apply recommended R-410A refrigerant lubricant to the outside of the flared refrigerant lines (Figure 5-A).
5. Align the threaded connections with the flared refrigerant lines. Tighten the flare nuts lightly at first to obtain a smooth match (Figure 5-B).

Table 2. Refrigerant Piping Connections
(Up to a maximum of 32 ft. only)

Size (Btuh)	Liquid Line in.	Vapor Line in.
7000 12000 15000	1/4	1/2
18000 24000 30000 36000 48000	3/8	5/8

Always refer to the provided piping diagram for correct piping sizes. Contact Lennox VRF Application support for assistance with piping sizing or an updated piping diagram.

NOTE - *5/8" and 3/8" flare nuts are part of the reducing adapters. Cut the reducing adapters to release the 5/8" and 3/8" flare nuts.*

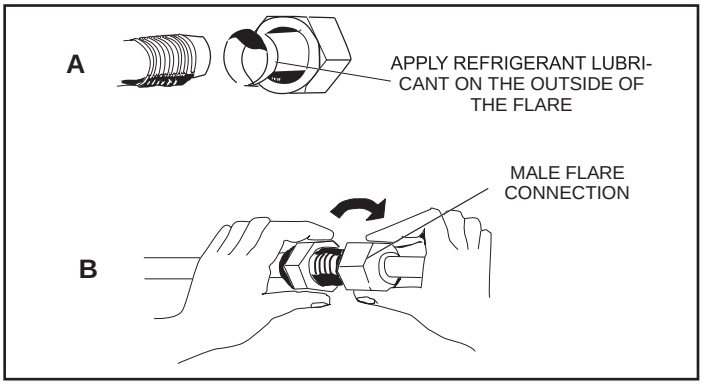

Figure 5. Making Connections (Male to Female Connection)

6. Then, use two wrenches to continue to tighten the nuts without twisting the pipes. Once snug, continue another half-turn on each nut which should create a leak-free joint. A torque wrench may be used to tighten flare nuts using table 3 recommendations. See Figure 6. **Do not over-tighten a flared joint. Flared connections should always be accessible and must be insulated to prevent condensation.**
7. After refrigerant piping has been installed and checked for leaks, apply insulation over the piping and all flare connections.

⚠ IMPORTANT

Always use two wrenches when tightening flare nuts to avoid twisting refrigerant piping. DO NOT over-tighten flare nuts.

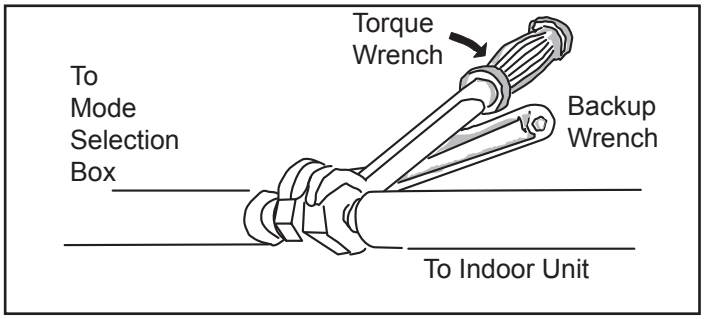

Figure 6. Tighten Flare Nut

Table 3. Flare Nut Torque Recommendations

Outside Diameter	Recommended Torque	No torque wrench available Finger tighten and use an appropriately sized wrench to turn an additional:
Inches	**U.S.**	
1/4”	15 ft.-lb.	1/4 turn
3/8”	26 ft.-lb.	1/2 turn
1/2”	41 ft.-lb.	7/8 turn
5/8”	48 ft.-lb.	1 full turn

Flare nuts may need further tightening. Check ALL system flare nut connections during pressure testing process.

IMPORTANT!

Flared connections should always be accessible and must be insulated to prevent condensation. See Figure 7.

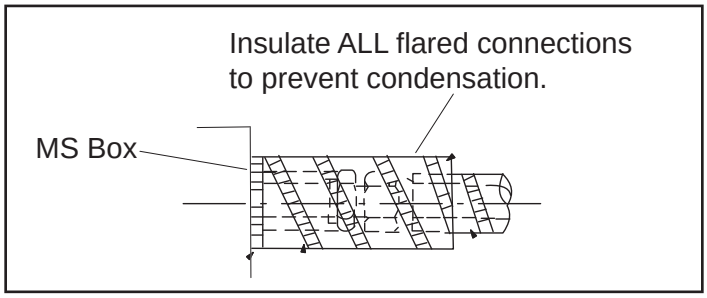

Figure 7. Insulate Flared Connections

Table 4. Piping Connection Information

Indoor Unit Capacity BTUs	Indoor Unit Factory Flare Connection Sizes Gas/Liquid	Piping Length From MS Box to Indoor Unit Is equal to or less than 32 ft.	Adaptor Required for Connection to MS Box	Piping Length from MS Box to Indoor Unit is greater than 32 ft.	Adaptor Required for Connection to MS Box
7,000	1/2 x 1/4	1/2 x 1/4	Yes -Factory Supplied	5/8 x 3/8	No
9,000	1/2 x 1/4	1/2 x 1/4	Yes -Factory Supplied	5/8 x 3/8	No
12,000	1/2 x 1/4	1/2 x 1/4	Yes -Factory Supplied	5/8 x 3/8	No
15,000	1/2 x 1/4	1/2 x 1/4	Yes -Factory Supplied	5/8 x 3/8	No
18,000	5/8 x 3/8	5/8 x 3/8	No	3/4 x 1/2	Yes -Field Supplied
24,000	5/8 x 3/8	5/8 x 3/8	No	3/4 x 1/2	Yes -Field Supplied
30,000	5/8 x 3/8	5/8 x 3/8	No	3/4 x 1/2	Yes -Field Supplied
36,000	5/8 x 3/8	5/8 x 3/8	No	3/4 x 1/2	Yes -Field Supplied
48,000	5/8 x 3/8	5/8 x 3/8	No	3/4 x 1/2	Yes -Field Supplied
54,000	5/8 x 3/8	5/8 x 3/8	No	3/4 x 1/2	Yes -Field Supplied

NOTE - *For VHIA072/096 indoor units, refer to the VHIA installation manual and system piping diagram for correct pipe sizes.*

NOTE - *All VVCA units have brazed connections. Piping length rules still apply.*

⚠ IMPORTANT

It is imperative that the system piping is installed per the LVSS (Lennox VRF Selection Software) piping report! If the measurements on the Lennox VRF piping diagram do not match the anticipated field measurements, contact Lennox VRF Application Support before beginning piping installation.

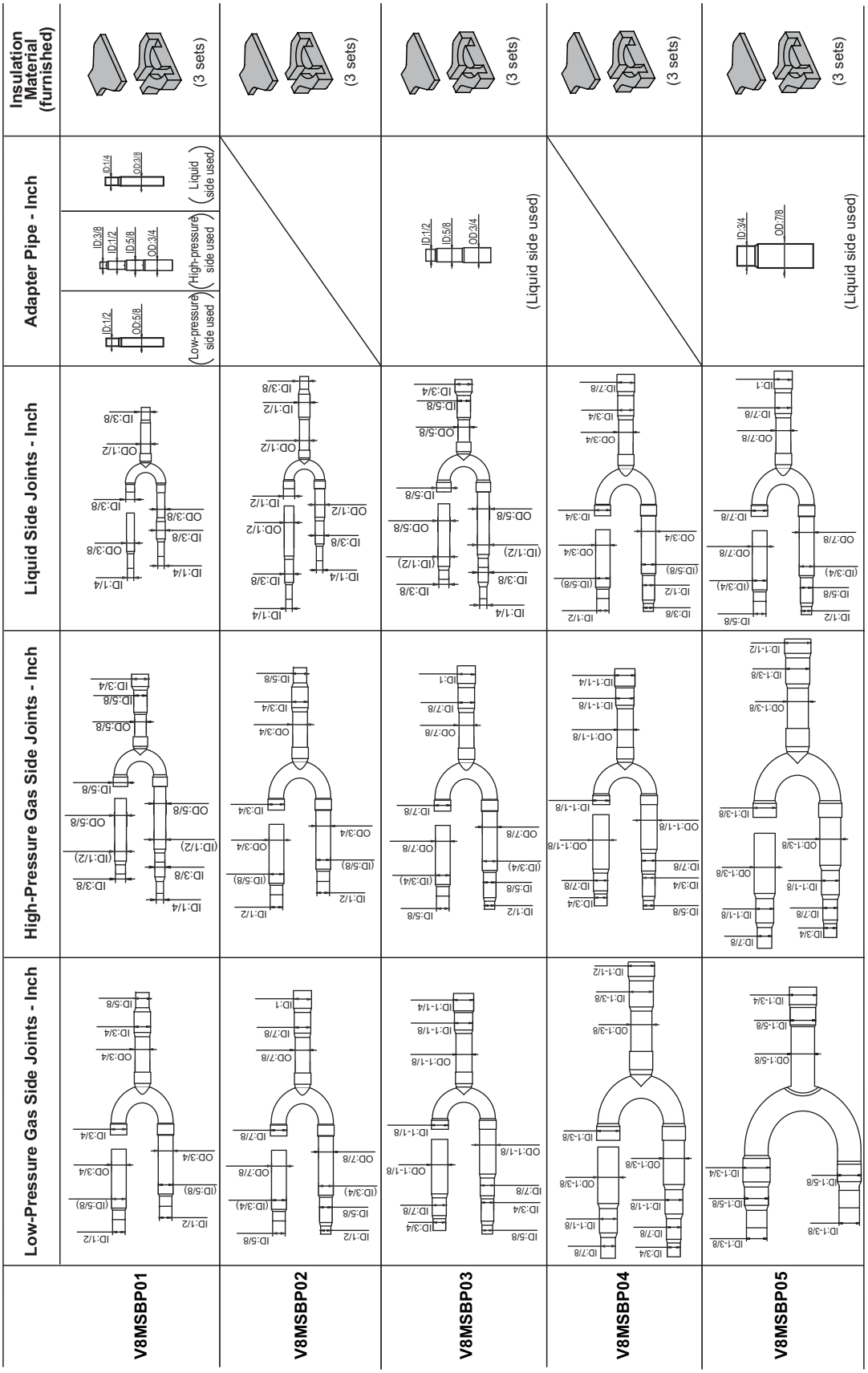

⚠ IMPORTANT

Locate first branch pipe kit of system centrally to ensure even distribution of refrigerant.

Figure 8. Mode Selection Box Branch Pipe Kits

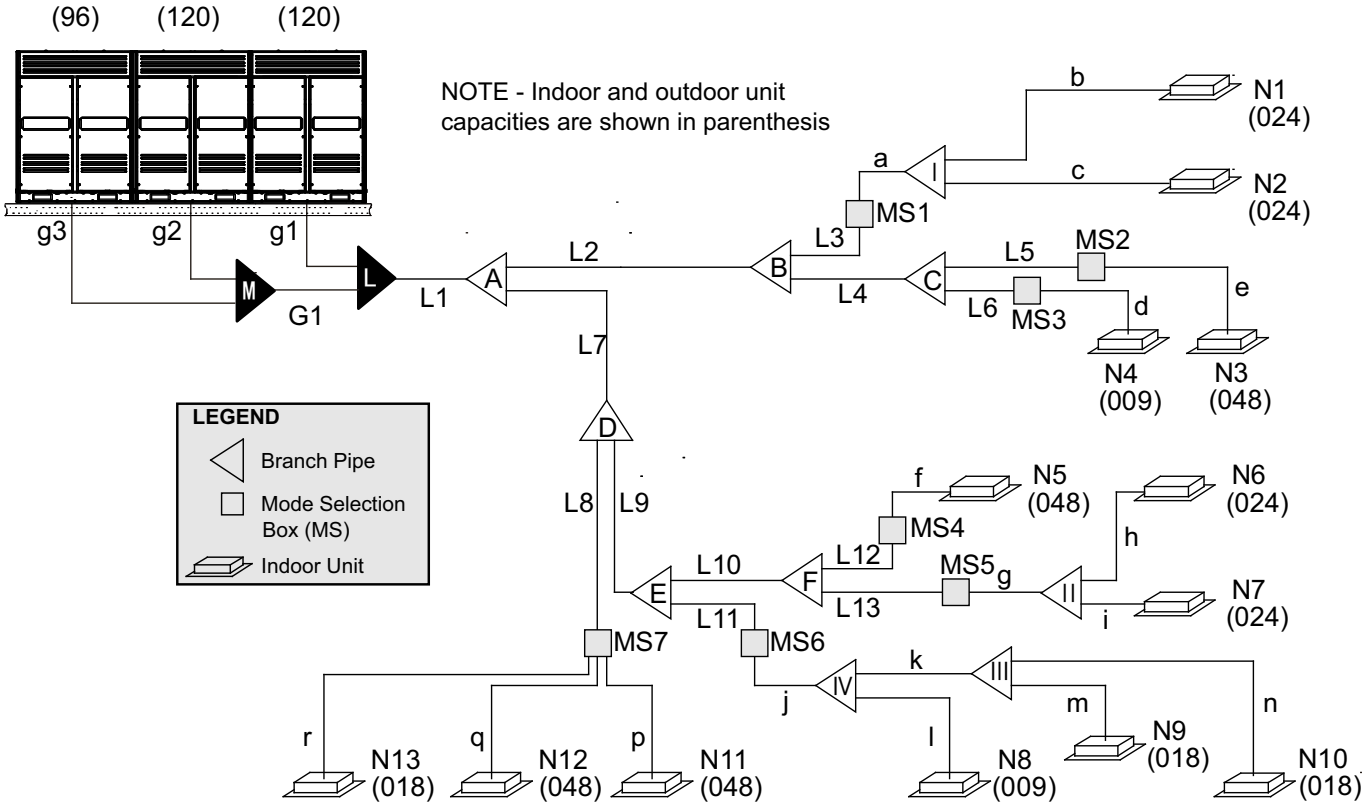

PIPE AND COMPONENT NAMES

Name	Designation
Outdoor Unit Connection Pipe	g1, g2, g3, G1
Outdoor Unit Branch Pipe Assembly	L, M
Main Pipe	L1
Indoor Unit Main Pipe	L2, L3, L4, L5, L6, L7, L8, L9, L10, L11, L12, L13
Branch Pipe Assembly between Main Pipe and Mode Selection Box (MS)	A, B, C, D, E, F
Mode Selection Box (MS)	MS1, MS2, MS3, etc.
Branch Pipe Assembly between Mode Selection Box (MS) and Indoor Unit	I, II, III, IV
Indoor Unit auxiliary pipe between Mode Selection Box (MS) and downstream Branch Pipe joint	a, g, j, k
Indoor Unit auxiliary pipe from Indoor Unit to the nearest Branch Pipe joint or direct connected Mode Selection Box (MS)	b, c, d, e, f, h, i, l, m, n, p, q, r
Indoor Unit	N1, N2, N3, etc.

Figure 9. Typical Piping Diagram

Branch Pipe Kit Placement

Provide 24 inches to 36 inches of straight pipe before and after each branch pipe kit to avoid creating refrigerant turbulence and flash points. Failure to follow 24 inch minimum guideline can lead to reduced capacity and equipment damage. See Figure 7.

⚠ CAUTION

24 inches minimum straight pipe required before and after branch pipe kit to prevent capacity loss and equipment damage.

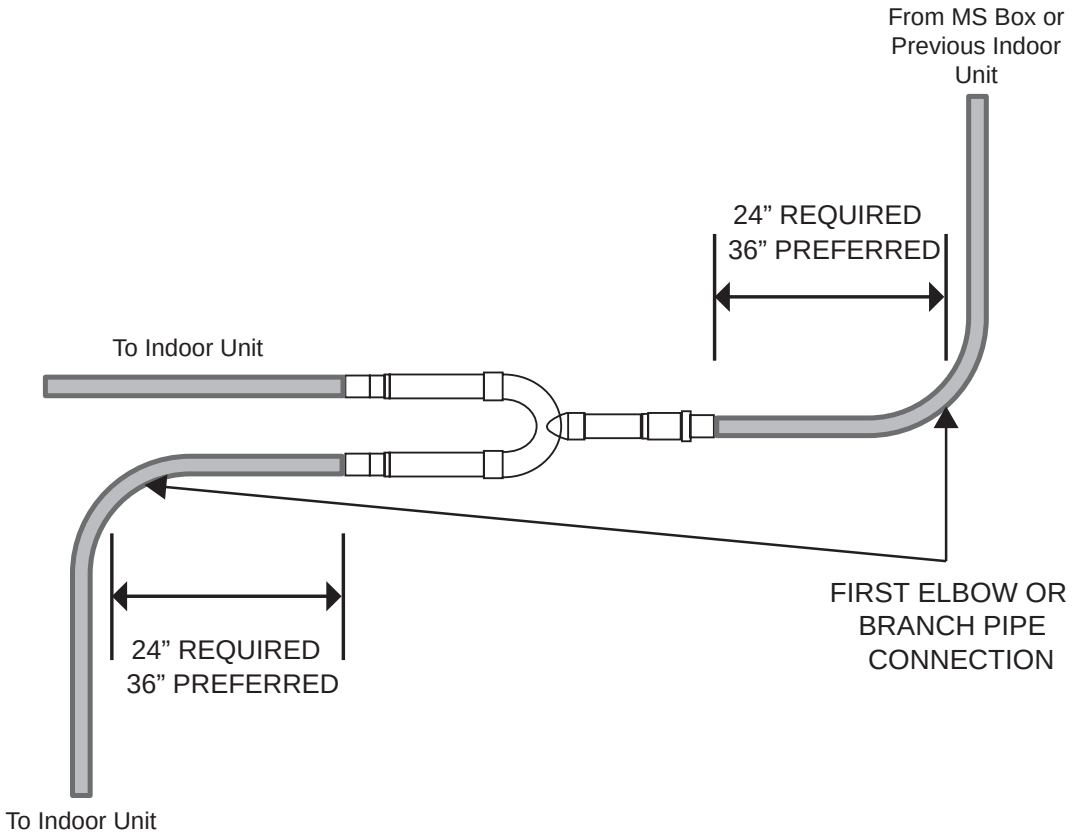

Top View
Branch pipe kits MUST be installed horizontal +/- 10°

NOTE - *A maximum of four indoor units can be connected to one port on the Mode Selection Box. The combined maximum capacity of all indoor units connected to one port on a Mode Selection Box must not exceed 54,000 BTUs.*

Name	Gas Side Joints (inch)	Liquid Side Joints (inch)	Insulation Material (furnished)
V8IDBP01	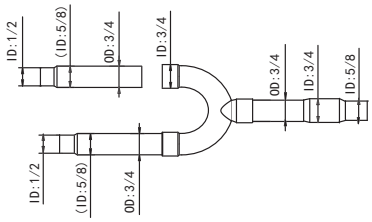	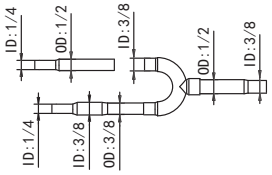	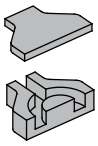 (2 sets)

⚠ IMPORTANT

OPERATION NOTE — All indoor units within a group (units connected to a single piping connector on the mode selection box) must operate in the same mode at all times.

Figure 10. Inches of Straight Pipe Before and After Branch Pipe Kit

Condensate Drain Connection

A 1 inch OD condensate drain connection is provided on the mode selection box. Route condensate piping to a suitable drain per best practices, taking care to slope the drain properly to ensure drainage. A 1 inch to ¾ inch adaptor is provided if ¾ inch condensate pipe is preferred.

The mode selection box must be sloped 1/8” toward drain outlet.

Mode Selection Box Wiring Connections

⚠ WARNING

Isolate the power supply before accessing unit electrical terminals.
Install unit so that unit disconnect is accessible.
Follow all local and national codes, as well as this installation instruction, during installation. Do NOT overload electrical circuit, as this may lead to failure and possible fire.
Use specified wiring and cable to make electrical connections. Clamp cables securely and make sure that connections are tight to avoid strain on wiring. Insecure wiring connections may result in equipment failure and risk of fire.
Wiring must be installed so that all cover plates can be securely closed.
This unit must be properly grounded and protected by a circuit breaker. The ground wire for the unit must not be connected to a gas or water pipe, a lightning conductor or a telephone ground wire.
Do not connect power wires to the outdoor unit until all other wiring and piping connections have been completed.

In the U.S.A., wiring must conform with current local codes and the current National Electric Code (NEC). In Canada, wiring must conform with current local codes and the current Canadian Electrical Code (CEC).

Refer to unit nameplate for minimum circuit ampacity and maximum overcurrent protection size.

NOTE - *Three-conductor shielded cable must be used for the communication wiring. This is necessary to* ensure proper system communication and operation.

Remove the cover panel from the mode selection box and locate the terminal strip.

Connect properly sized power wiring and three-conductor shielded cable as shown.

Indoor units and mode selection boxes on the same refrigeration circuit should have a common power supply but must have an independent disconnect switch installed adjacent to the mode selection box for servicing and maintenance purposes. Indoor unit and mode selection box power supply MUST not be taken from the outdoor unit. Always follow NEC/CEC and Local Codes.

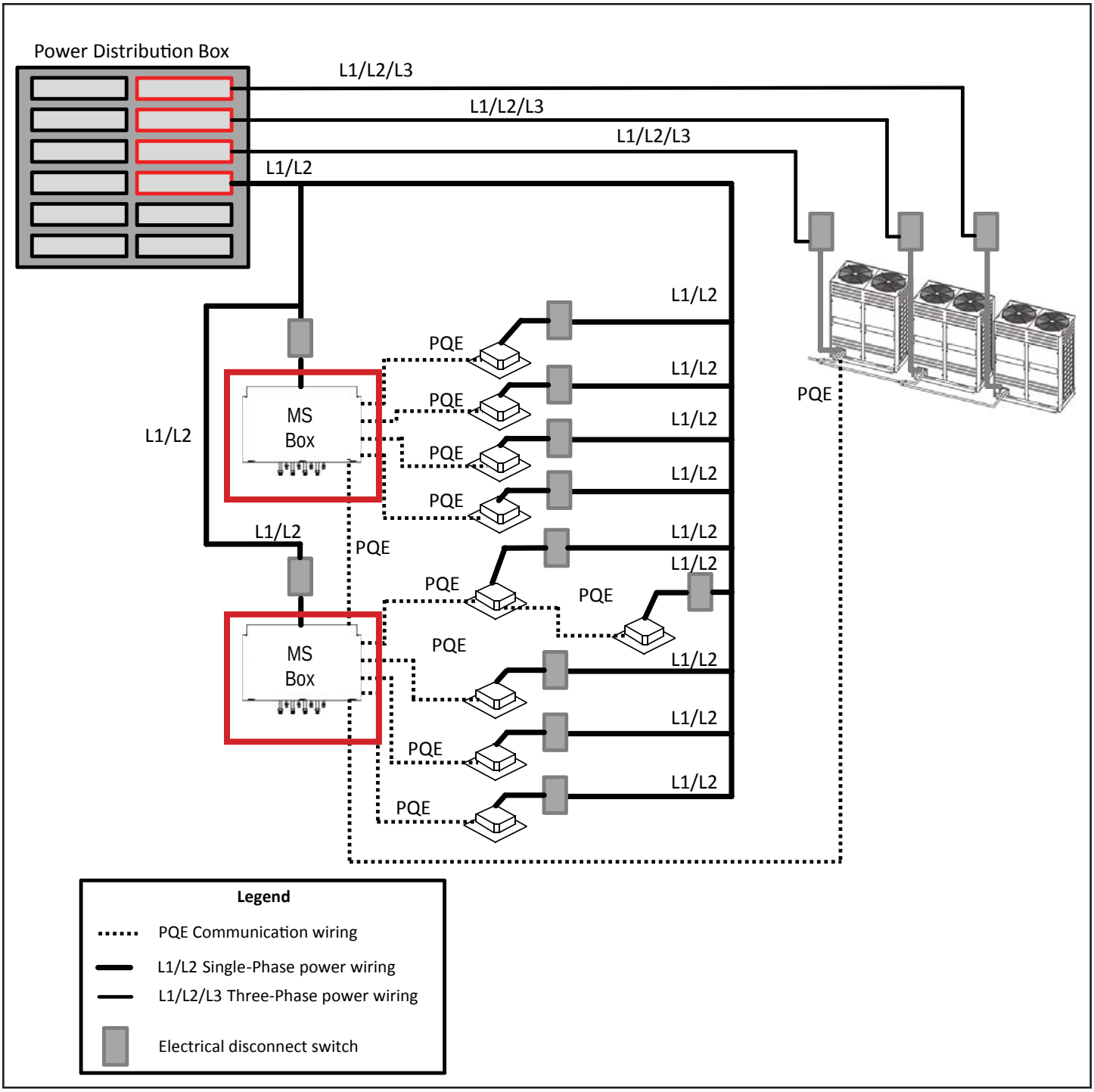

Figure 11. Typical Power Wiring Diagram (VRF Heat Recovery System Shown)

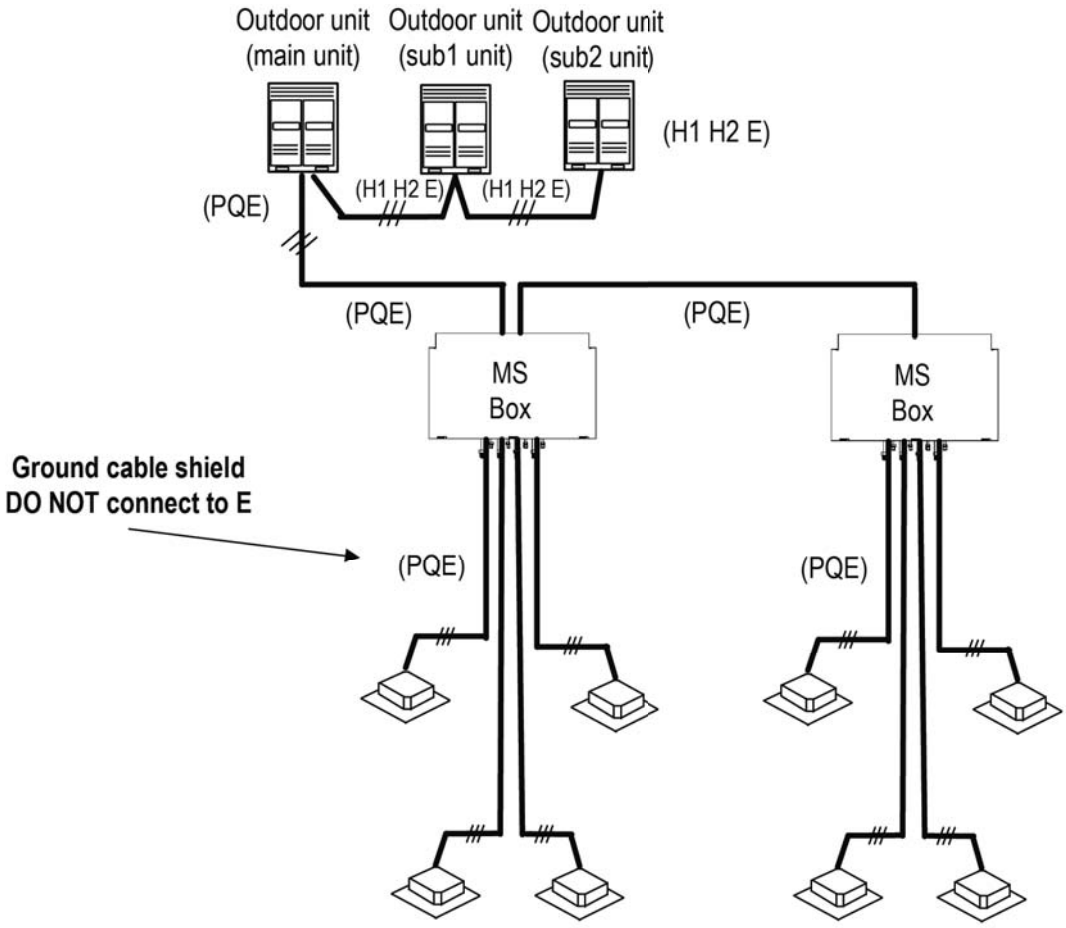

P Q Install a terminating resistor at terminals P and Q for each individual unit when connected directly to an MS Box port.

All shields of shielded cable connect to GROUND terminal, **not to terminal E**.

18 GA., stranded, 3-conductor, shielded control wire (polarity sensitive).

Typical Wiring Diagram, NEC/CEC and Local Codes apply.

NOTE - Each communication wire from the mode selection box should follow the refrigerant piping for that port.

Figure 12. Typical Communication Wiring Diagram (VRF Heat Recovery System)

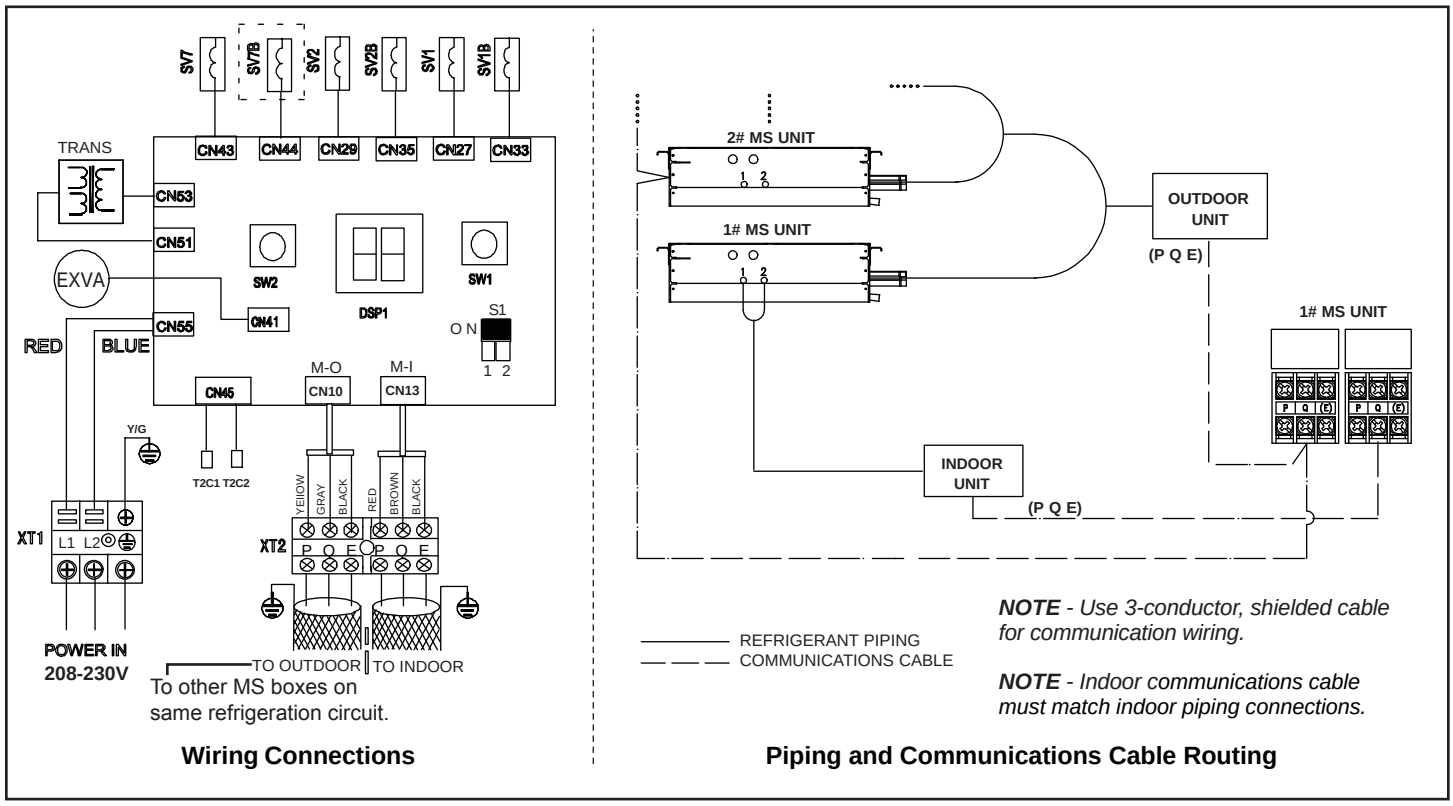

Wiring Connections **Piping and Communications Cable Routing**

Figure 13. V8MSBB01 Connections
VHIA072 and VHIA096 Only

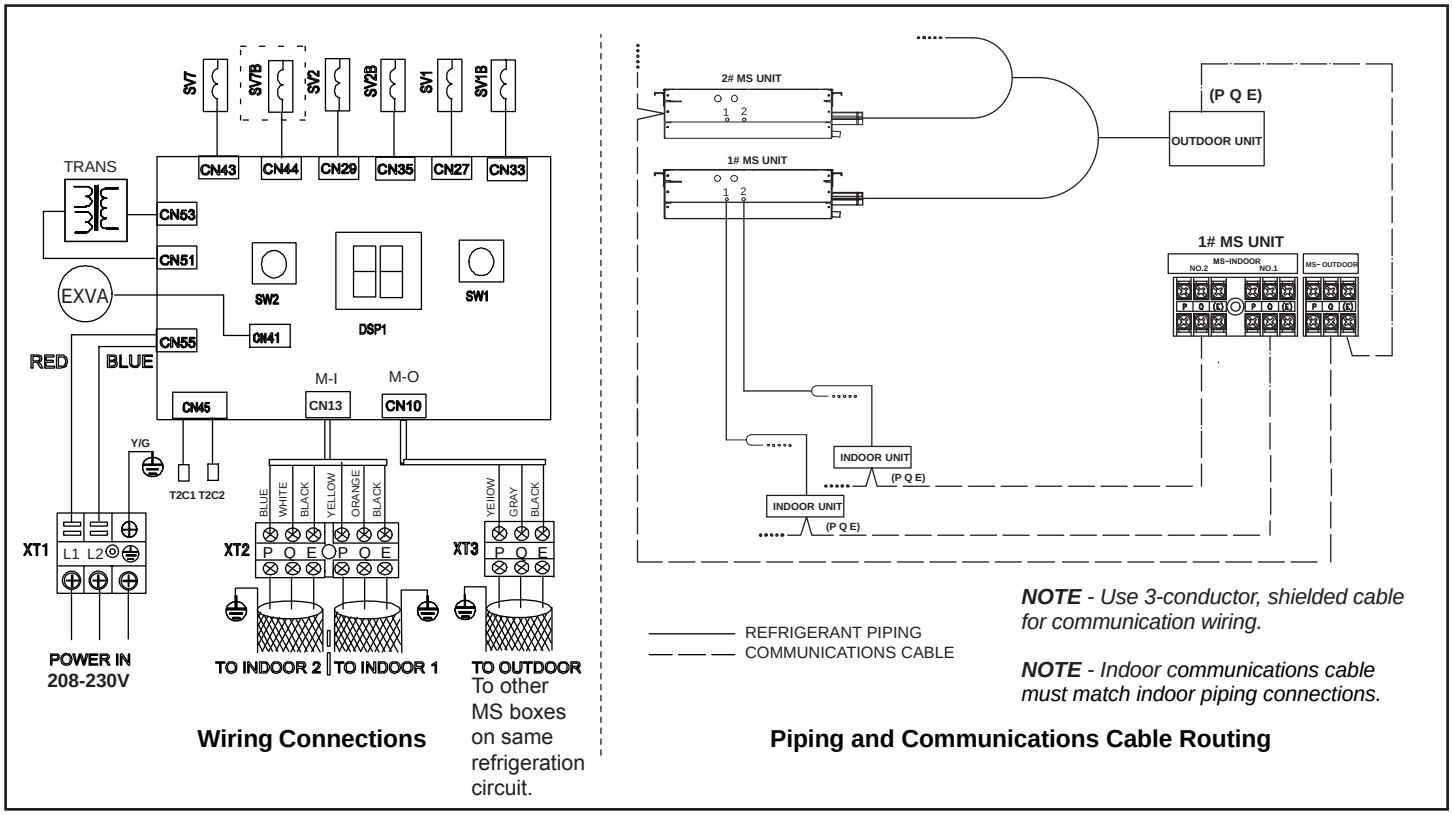

Wiring Connections **Piping and Communications Cable Routing**

Figure 14. V8MSBB02 Connections

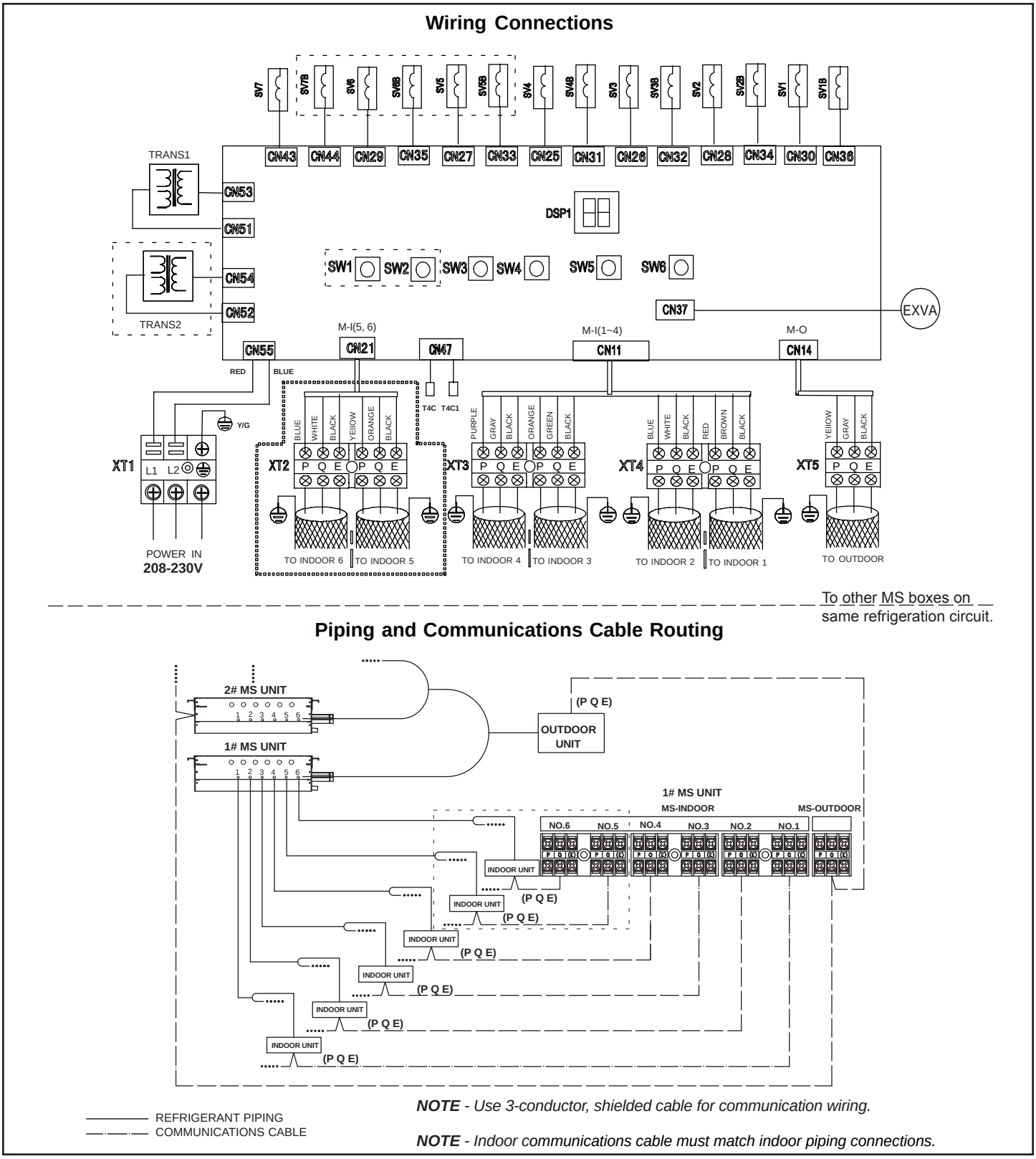

Figure 15. V8MSBB03 and V8MSBB04 Connections

Network Address and Commissioning

After the system has been installed, use the system remote control to assign a separate address for each of the indoor units as part of the commissioning procedure.

Mode selection boxes do not require an address; however, each indoor unit connected to the mode selection box must be assigned an individual address.

V8MBB01 Piping and Wiring Connection to VHIA072 or 096

Refrigerant Piping

- Use the provided branch pipe kit to connect both sets of refrigerant line connections.
- Locate branch pipes no more than 32 feet from indoor unit.
- Piping between branch pipe and indoor unit: liquid line = 3/8” and gas line = 5/8“.
- Consult LVSS piping report diagram for all other piping sizes.

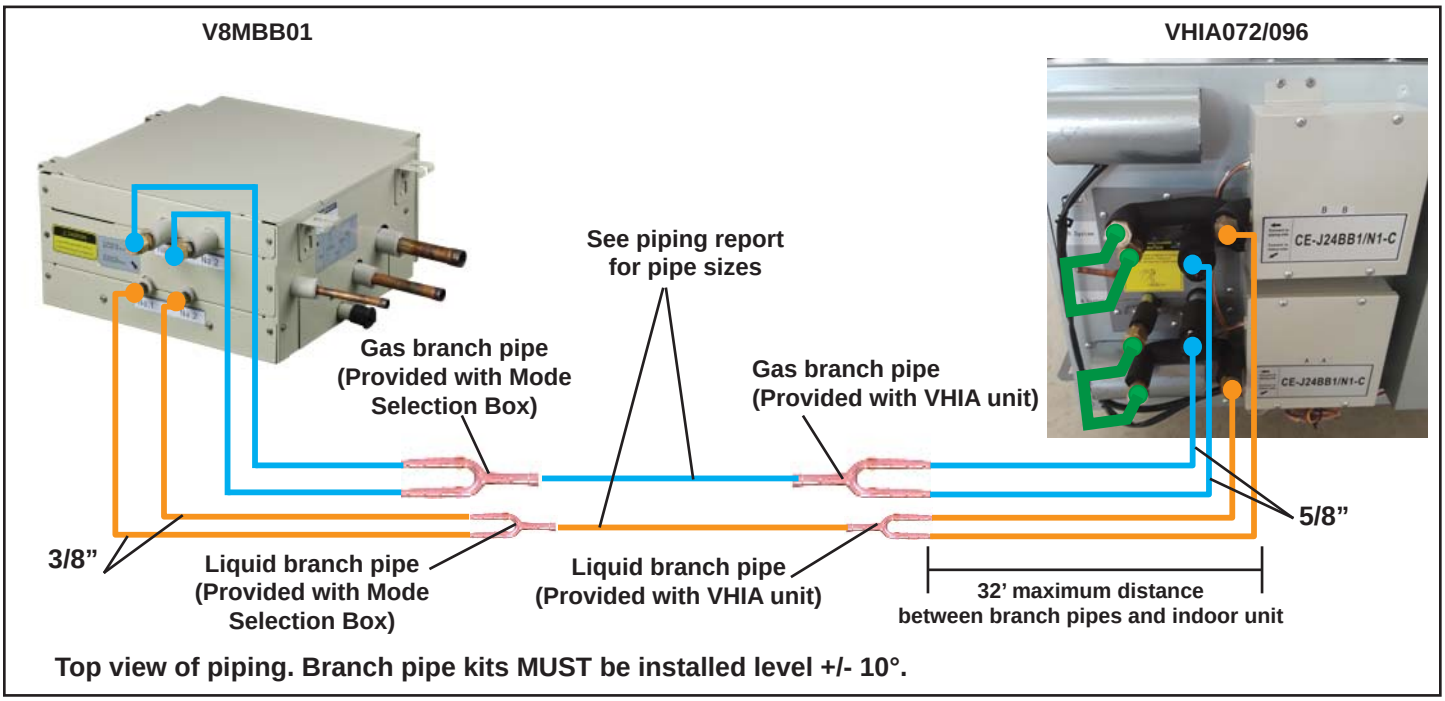

Figure 16. Piping for VHIA072 or 096 when V8MSBB01 is Greater Than 15 ft. (4.5 m) Away - VRA Heat Recovery

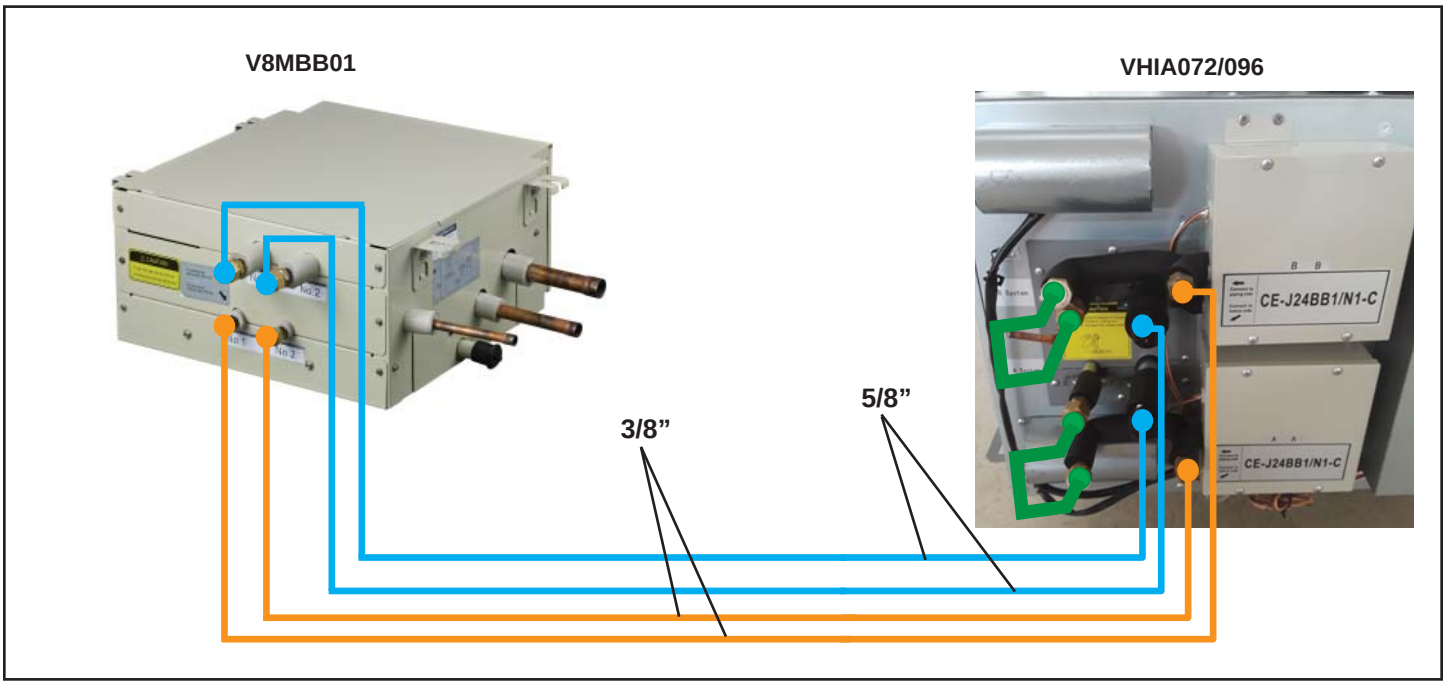

Figure 17. Piping for VHIA072 or 096 when V8MSBB01 is Equal To or Less Than 15 ft. (4.5 m) Away - VRA Heat Recovery

A

Connect these two pipes as shown in "A" below.

Incoming liquid line connection

Incoming suction line connection

Incoming suction line connection

Incoming liquid line connection

Connect these two pipes as shown in "A" left.

Figure 18. VHIA072 and 096 Refrigerant Connections

System Communication Wiring

- Connect PQE wiring to Board A of the VHIA072 or 096 Indoor unit.

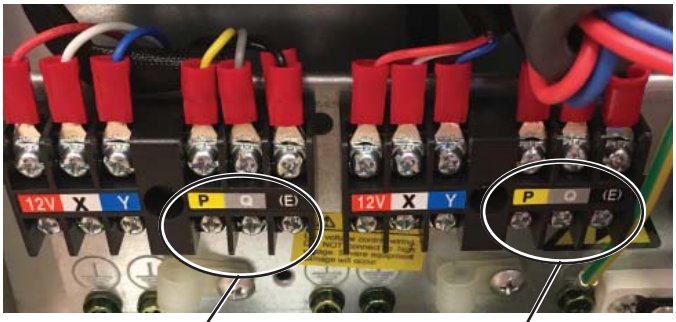

Terminal Block A PQE

Terminal Block B PQE

Figure 19. VHIA072 and 096 Communication Terminal Block

Troubleshooting

LED Lamp Definitions

LED Lamp	Normally ON	Slow Flash	Flash
LED 1	Outdoor unit ON	Outdoor unit standby	Outdoor unit communication error
LED 2	Indoor unit ON of this MS	Indoor unit OFF this MS	Indoor unit communication error

Operation Mode References

0	OFF
2	COOLING MODE
3	HEATING MODE

4	FORCED COOLING MODE
5	MAIN COOLING MODE
6	MAIN HEATING MODE

Spot Check

No.	Description	Notes
1	Indoor unit quantity under the port	
2	Operation mode under the port	
3	Subcool inlet temperature	When actual temp. ≤-9°, show -9; When indoor unit is OFF or operating Fan mode, show -9 (means invalid value)
4	Superheated outlet temperature	
5	T2 average of the system if operation mode is heating under the port. T2B average of the system if operation mode is cooling under the port	
6	T2 average of indoor units under the port if operation mode is heating under the port. T2B average of indoor units under the port if operation mode is cooling under the port	
7	Indoor unit quantity in the system which operate the same mode as the port.	
8	System operation mode	
9	Sub cool EXV Pulse Position	
10	Indoor unit quantity under the port which are ON.	
11	Software version	
12	End	

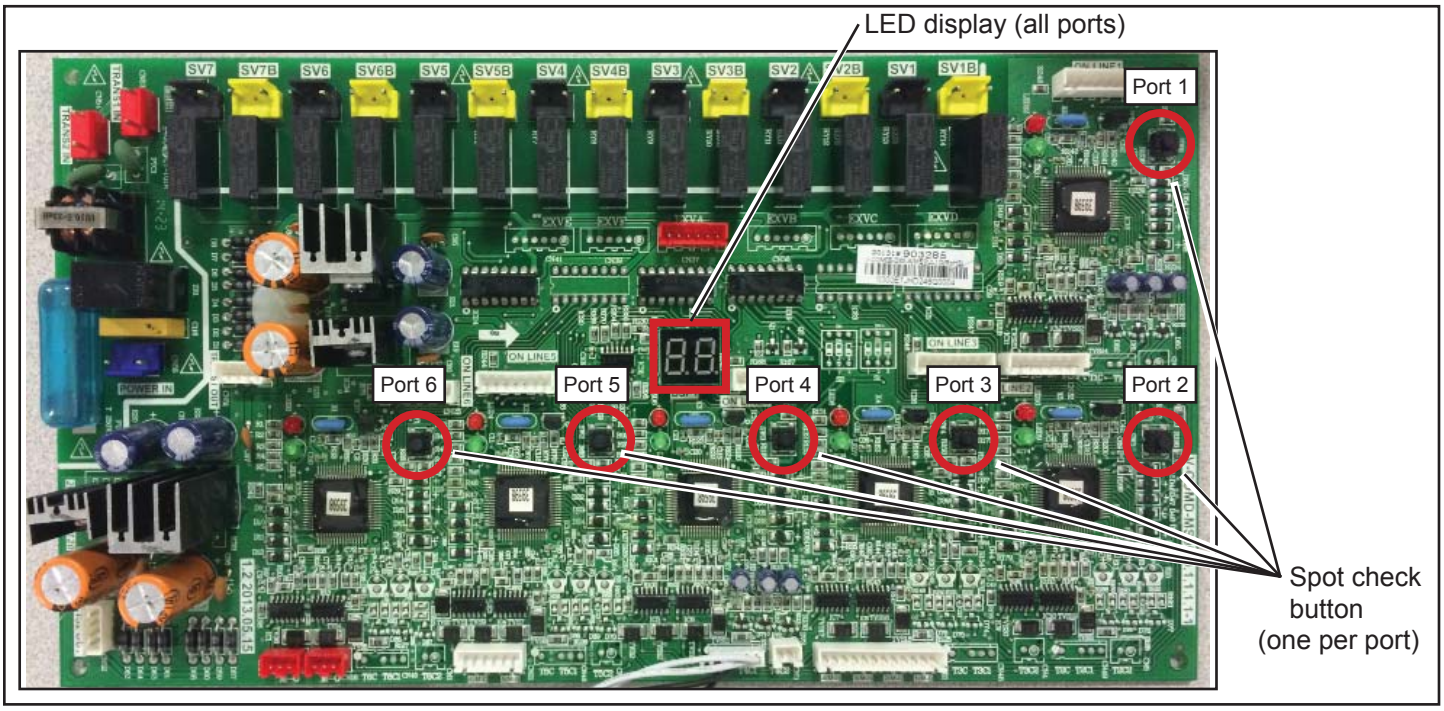

Figure 16. Spot Check

Technical Support

1-844-GET-VRF1

(1-844-438-8731)

vrftechsupport@lennoxind.com

www.LennoxVRF.com

Download the app

from the Apple App Store or the Google Play store.